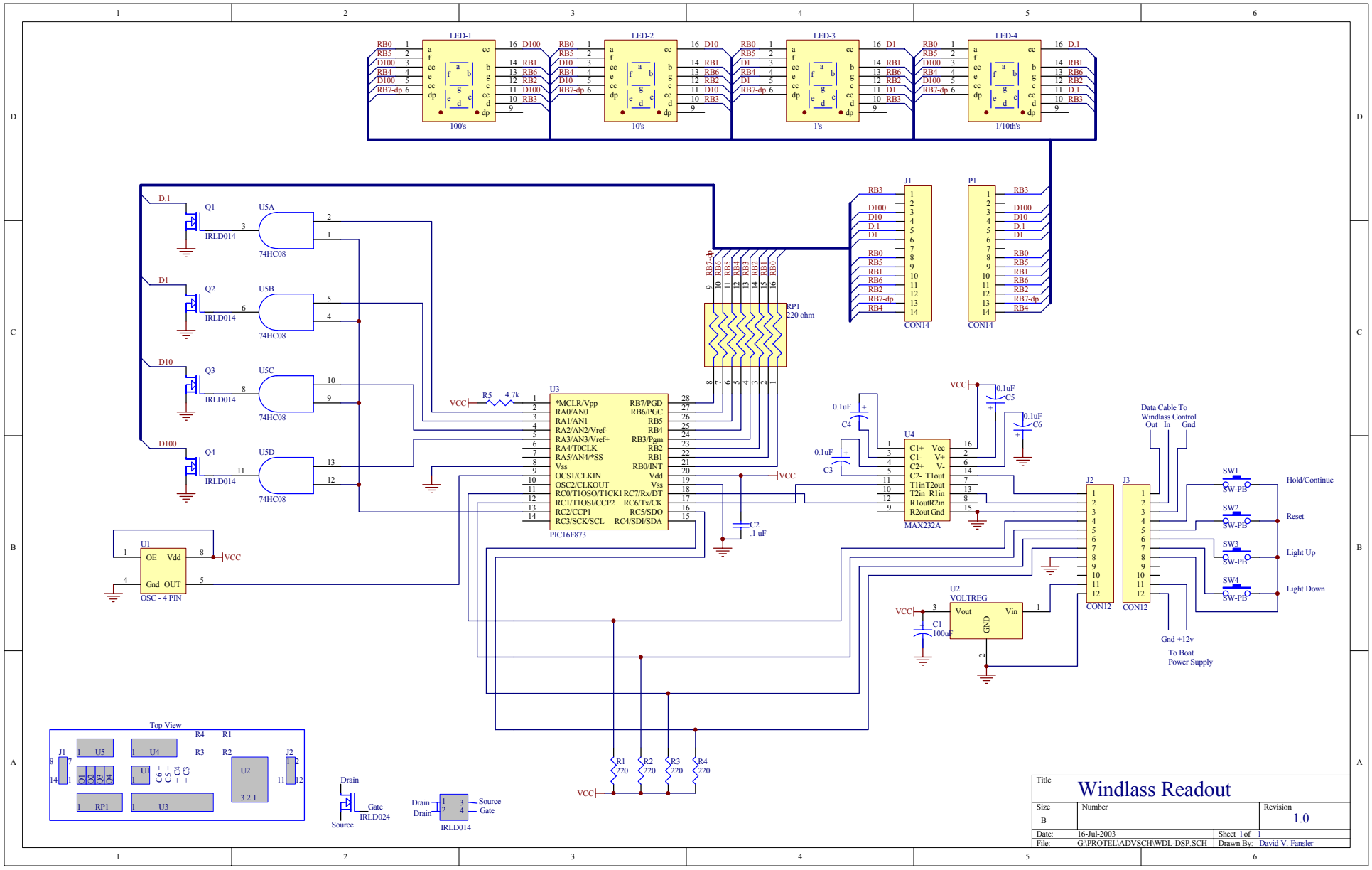
LED-1
100's
LED-2
10's
LED-3
1's
LED-4
1/10th's
J1
CON14
P1
CON14
RP1
220 ohm
Q1
Q2
Q3
Q4
IRLD014
U5A
U5B
U5C
U5D
74HC08
U3
PIC16F873
*MCLR/Vpp
RA0/AN0
RA1/AN1
RA2/AN2/Vref-
RA3/AN3/Vref+
RA4/T0CLK
RA5/AN4/*SS
Vss
OCS1/CLKIN
OSC2/CLKOUT
RC0/T1OSO/T1CK1
RC1/T1OSI/CCP2
RC2/CCP1
RC3/SCK/SCL
RB7/PGD
RB6/PGC
RB5
RB4
RB3/Pgm
RB2
RB1
RB0/INT
Vdd
Vss
RC7/Rx/DT
RC6/Tx/CK
RC5/SDO
RC4/SDI/SDA
R5 4.7k
VCC
C2 .1 uF
U1
OE Vdd
Gnd OUT
OSC - 4 PIN
U4
MAX232A
C1+ Vcc
C1- V+
C2+ V-
C2- T1out
T1in T2out
T2in R1in
R1out R2in
R2out Gnd
C3 0.1uF
C4 0.1uF
C5 0.1uF
C6 0.1uF
U2
VOLTREG
Vout
Vin
GND
C1 100uF
J2
CON12
J3
CON12
Data Cable To
Windlass Control
Out In Gnd
SW1
SW2
SW3
SW4
SW-PB
Hold/Continue
Reset
Light Up
Light Down
Gnd +12v
To Boat
Power Supply
R1 220
R2 220
R3 220
R4 220
Top View
U5
U4
U1
U2
U3
RP1
J1
J2
R4
R1
R3
R2
C6 + C5 + C4 + C3
Q1 Q2 Q3 Q4
Drain
Gate
Source
IRLD024
IRLD014
Title
Windlass Readout
Size
B
Number
Revision
1.0
Date: 16-Jul-2003
Sheet 1 of 1
File: G:\PROTEL\ADVSCH\WDL-DSP.SCH
Drawn By: David V. Fansler